WC DRAKAR16 2P 2P

1,28 GPF 2 Piece Elongated Toilet

PRODUCT FEATURES:

Two-piece toilet.
Rectified bowl base for a perfect floor coupling.
Polished chrome top push button actuator.
Elongated bowl for more comfort.
Exposed trapway.
Fully glazed trapway, preventing clogs and bacteria.
Large water mirror for optimal cleaning.
Single-discharge flush, ensuring leak free and optimal operation.
TURVEX system technology to generate a perfect waste removal.
High Efficiency Toilet, low 1,28 GPF consumption.
This product can be used to help achieve water efficiency goals as well as gaining USGBC LEED points.

MATERIALS:

High-gloss vitreous china.
Durable and scratch-resistant finishes.

VALVES:

Certified fill and flush valves.
Silent fill valve.
Valves reinforced and calibrated.
Flush valve with hermetic seal.
Ø3" flush valve.

INCLUDED COMPONENTS:

Floor fixing kit.
Tank to bowl fixing kit.

INSTALLATION:

Connection to the supply line Ø15/16" - 14 NS-1
Outlet connection drain pipe Ø4" with wax ring or sanitary flange.

OPERATION:

Press the button once to flush fully 1,28 GPF.

CODES AND STANDARDS:

ASME A112.19.2 / CSA B45.1-2018 - Ceramic Plumbing Fixtures
CEC / DOE - ENERGY POLICY ACT 1992
ADA Compliant fixture complies with ICC/ANSI A117.1
EPA WaterSense Tank-Type High Efficiency Toilet

FINISHINGS:

W White
B Bone

Technical Support and Service
technicalservice@helvexusa.com
Toll Free Number: (210) 394-5686

Customer Service
contact@helvexusa.com
Toll Free Number: (855) 267-2498

Original Spare Parts

The product's illustration may vary in appearance or its parts to the actual product as a result of the ongoing improvement process. This does not imply any liability to the manufacturer.
Visit our website **www.helvexusa.com**

NC

WC DRAKAR16 2P 2P

1,28 GPF 2 Piece Elongated Toilet

Estimated Dimensions Dim. inch. [mm]

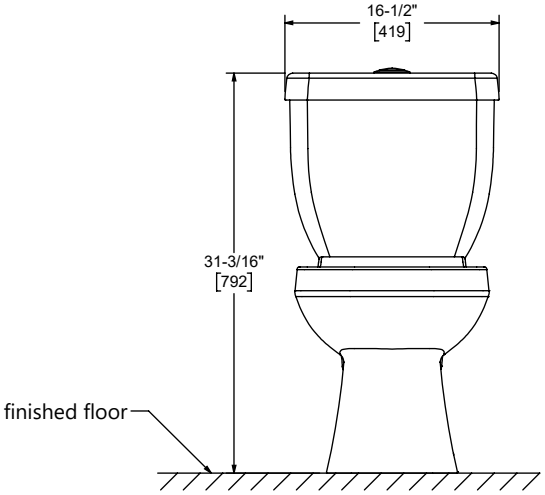

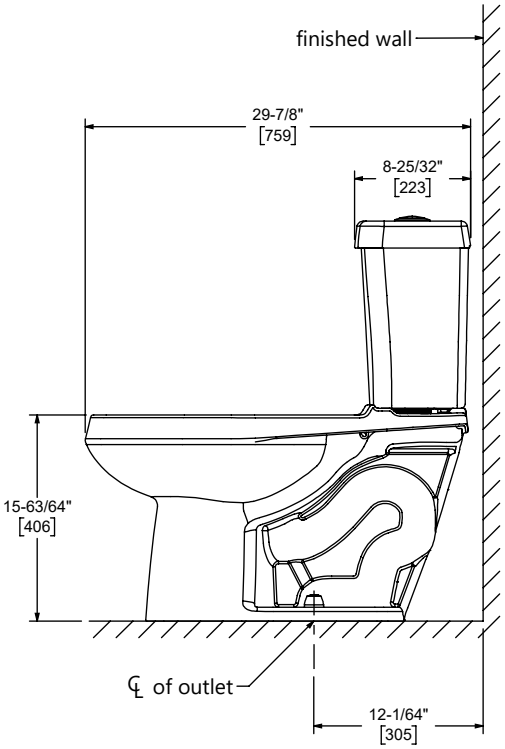

WORKING PRESSURE:

Pmin.= 20 PSI

Pmax.= 80 PSI

MAXIMUM CONSUMPTION:

1,28 GPF

NOTES:

Install the product according to the Installation Guide.

Technical Support and Service

technicalservice@helvexusa.com

Toll Free Number: (210) 394-5686

Customer Service

contact@helvexusa.com

Toll Free Number: (855) 267-2498

Original Spare Parts

The product's illustration may vary in appearance or its parts to the actual product as a result of the ongoing improvement process. This does not imply any liability to the manufacturer.
Visit our website **www.helvexusa.com**

NC